OPERATION AND MAINTENANCE MANUAL
FOR KLW4120 Automatic Electrical Pump



WREN Hydraulic

It is operating manual of KLW4120 Automatic Electrical Pump, please read carefully follow instructions、warnings and cautions before using the tools.

Safety Guide

The hydraulic torque wrench pump's safe usage requires correct operation and regular inspect. And the user is requested to follow always and carefully .
▲precaution to avoid direct loss in economic or property.
▲warning to avoid personal injury.
Please follow herein before!
When using, if something abnormal happens, please shut off the power immediately, and then consult WREN or WREN`s agent.

1.When using, do not permit any person stand at the oil output in order to avoid personal injury and equipment damage. Please put the pump far away from the fire.
2.Make sure that the hose and quick coupler be connected before building up the pressure in order to avoid hydraulic fluid spurting out to cause personal injury.
3.The maximum operating pressure of this pump is 700Bar,WREN has set up the pressure to 700Bar before selling this pump. Please do not adjust to a pressure higher than the maximum pressure which WREN has not set.
4.If this pump is used for operating other equipments, make sure the maximum operating pressure of the equipments will be less than 700Bar. Please adjust the pressure to which the equipment need, or else the equipment would be damaged.
5.Make sure the power of the pump is shut off before repairing it.
6.Please shut off the switch before starting power; if the switch is on, the pressure may increase.
7.Make sure the equipment be connected with ground to avoid electric shock.
8.Please do not change any part of the pump; if it must be changed, please inform WREN or Wren's agent for help. Without allowance of WREN or its agent, any refit of it will be out of our warranty range.
9.Please do not fill the pump reservoir with too much oil, otherwise, the pressure of the reservoir will increase and the oil will spill over, so the reservoir will be broken and the environment will be polluted.
10.Automatic operation button is pressed, the automatic cycle start button switch bounce, automatic program stop. Under a state of emergency, you must first cut off the power supply of a motor.
11.Make sure the quick coupler is tightened; if the quick coupler is not tightened enough, the equipment will not work normally; if it is a synchronic system, the problem may cause one or several pieces of equipment out of order and the quick coupler may be broken and it may cause personal injury or equipment damage.
12.Please stand away from the position where the hydraulic oil may be spurt out; hydraulic oil may penetrate your hand and hurt you.
13.If the hydraulic oil splashed in your eyes, please immediately wash your eyes about 15 minutes with clean water, then you must go to hospital for help right now.
14.Electrical box with flashing lights. If the bright lights, the circuit fault. Usually the indicator does not work. If there is light to timely repair
15.The wrench and power pump are connected by a 700 Bar operating pressure, twin-line hose assembly. Each end of the hose will have one male and one female connector to assure proper interconnection between pump and wrench.

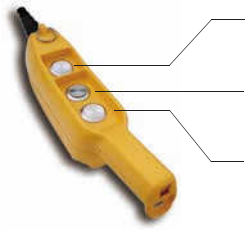

16.Please do not touch the pressurized hose; if the hydraulic oil splashed out, it will cause serious injury.

PRECAUTION

1.Only WREN hydraudic special oil available.
2.Do not use pressure regulate valve as relief valve.
3.The used hydraulic oil should be put away according to the antipollution ordinance.

DESCRIPTION

1.This pump is used for hydraulic torque wrench and fitted in integrated way, it is an independent hydraulic unit that mainly consists of pump, control valve, oil reservoir, motor, meter, control-line fitting, it has the peculiarity of small volume, light weight, simple composition, convenient operation, high working pressure. The pump can supply oil with one high and one low oil outlet at the same time, which could make a large quantity of oil outputting. On high pressure, the low pressure pump will automatically let oil return through the release flow valve, which can reduce power consumption, and the pressure of the outlet can be arbitrarily adjusted from 70 to 700 bar.
2.Hydraulic oil for this pump:46# or 32# anti-wear hydraulic oil.
3.Environmental temperature for using this pump:-10~80 ℃
4.Please use Wren's high pressure hose, high pressure coupler, and so on. The maximum operation pressure of high pressure hose for this pump is 1000Bar; please choose suitable system for it.
5.If you need to use attached hydraulic product for pump, please contact WREN's engineers.
6.Please do not use this pump around the fire.
7.Please do not adjust the pressure valve arbitrarily to avoid personal injury or equipment damage due to high pressure.
8.Please confirm that the voltage for this pump is the same as the voltage of using on the spot.
9.You'd better use the pump indoors, please protect the pump from rain if it is used outdoors.

CHARACTERISTIC

1. KLW4120 is three-stage pump. Pressure relief valve is asslembled in the high pressure port .the rated pressure in the low pressure port is 5-7Mpg,And the flow is 0.8L/M under 700Bar.
2. Max operating pressure:700Bar
3. Flow:three-stage,can simultaneity use 2 torque wrenches
4. Motor:220V/50Hz
5. Environmental temperature:-10~80°C
6. Rerervoir dimension:448×428×281mm
7. Weight（No oil）:28Kg
8. Hydraulic oil:ISO VG 46# or 32#

WARNING!!!

1.When operating, do not permit anyone stand at the oil output,The oil output must connect other components when adjusting the pressure.
2.When using, do not overpass the max operating pressure.
3.If need to check motor, please shut off the pump.
4. When working, the oil back to oil reservoir may add the pressure. If open the cover plate, unnecessary injury and damage will happen.
5.Proihbit to operate without oil
6.Keep the clean of the pump,clean especially the oil inlet, quick couplers.
7.Suggestion: in the condition of not using the pump always, please remember to replace the hydraulic oil

MAINTENANCE AND INSPECTION

1. The inspection before operating

(1).Please shut off the pump and inspect whether the position of the power connection is loose or not. If it is loose, please tighten it.

(2).Please inspect whether the hydraulic oil in the oil reservoir is enough or not, if it is not enough, please fill the oil in time.

(3).The pump is still working when the direction of the air valve is changed, please build up pressure and inspect whether the whole equipment is normal or not.

(4).Please inspect whether the house and other equipments are leaky or not, if this happened, please inspect to find the reason and repair it or replace it.

2.The inspection in operation

When inspecting the following items, if there is abnormal situation, please shut off the pump and repair it.

(1)Please inspect whether there are abnormal condition or not in the course of raising the pressure.

(2)Please inspect whether the houses and other equipments are leaky or not.

(3)Please inspect whether there is some abnormal noise, rocking and smell or not during the operation of the motor.

(4)Please inspect whether the temperature of hydraulic oil is too high or not.

3.The inspection after finishing the operation of the pump.

(1)Making sure the pump must be turn down.

(2)Please inspect whether there are leaky or abnormal condition or not. If there is abnormal situation,please inspect to find the reason and repair it

(3)Please clean it after using the pump.

4.Refer to changing the hydraulic oil

The oil should be replaced once a year principally. If there are following abnormal conditions, please replace the oil immediately.

(1)If dust mixes with the oil, please replace the oil.

(2)If there is abnormal smell, please replace the oil.

(3)If the water mixes with the oil, the colour of the oil has been changed into milkiness, please replace the oil.

(4)If the colour of the oil has been changed into black-brown, please replace the oil.

5.The way replacing the hydraulic oil

(1)Please loosen the oil filler port of oil reservoir.

(2)Please take down the screw on the flank of the oil reservoir, let hydraulic oil out.

(3)Please clean the inner and filter of the oil reservoir.

(4)Please install the screw and fill the oil reservoir with the hydraulic oil.

WARNING: If the oil splashes into your eyes, please wash with clean water for at least 15 minutes, and Then see doctor immediately. If the oil splashes to your skin, please wash it with clean water and soap.

WARNING: Waste hydraulic oil bellows to industrial waste, it should be dealt with by special companies.

OPERATION INSTRUCTIONS

1.The first tank filled with standard of clean hydraulic oil, hydraulic oil should be used GB32# (winter) or 46# (summer), when filling the hydraulic oil to hydraulic pump on oil tank oil window shows the warning line, immediately stop charging, while tightening the fuel tank at the top of the gas hole cover.
2.Cxamination and connect the oil inlet and the oil return rubber hose. Check the tubing and pump body, between the tubing and work between mechanical joint is intact, tightly.
3.Check and connect the main power line, check the power lines and various electrical components, is in good condition. Such as: pressure gauges, electrical, automation of electrical control box, to prevent damage in transit.
4.The power switch, press the switch of the motor, so that the whole pumping station in a work situation automatic running 2-3minutes. At this time, pumping station is the internal internal air, at the same time please watch whether the motor running, the pump body has no abnormal noise or vibration.
5.After the above preparations, such as was not found to have any abnormal phenomenon is the basic work of pumping station is normal. The handle is manually operated button press, repeated several times in the air discharged high pressure hose.
6.press the manual button time to observe the pressure gauge pointer is upward, otherwise the pressure pump station work is not normal, please check the troubleshooting.
7.Press the manual button, regulating the regulator valve to the set pressure.

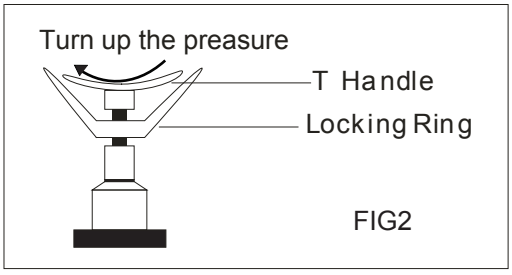

FIG2

TROUBLE SHOOTING GUIDE OF HYDRAULIC PUMP

The pump can't be started	The voltage isn't suitable	Confirming whether the voltage is suitable for the pump's need
	The power hasn't be connected	Checked the switch and distribution box and so on, and connect the power.
The system has no pressure	The quick coupler hasn't be connected to the correct position	Take down and reinstall it
	No oil in the oil reservoir	Fill in oil
	Not enough oil in the oil reservoir	Fill in oil
	If the system has a throttle and hand single-direction valve, please check if the valve are open	Open the throttle and hand single-direction valve, and make sure the system is a circle
After reinstalling the quick coupler,the system has no pressure	The quick coupler can't be connected to the correct position, which causes no pressure in the system	Take down the quick coupler, check if the boll is elastic with a rod, if it can't move, please knock it with a hammer to eliminate the mist hydraulic oil
Leakage in the quick coupler	The o ring and escape have worn out	Replace the quick coupler

The pressure can't reach to the set pressure	The relief valve is adjusted too low	Check with the gauge, and adjust the relief valve to the system set pressure
	Oil is mixed with water	Change oil
	Not enough oil in the reservoir	Fill in oil
	Suck in air to the system	Repeat operating the system with no load for several times to eliminate the air
	The throttle and hand single-direction valve haven't been tightened	Locking valve
	The throttle and hand single-direction valve haven't been adjusted to the correct position	Adjust to the correct position
	The throttle and hand single-direction valve have broken	Replace the valve
	There is foreign matter in the oil	Wash the pump valve and change clean oil
When using under static pressure, the pressure reduces slowly	The seal is out of control, please check all the seal	Replace the seal

Appendix

EXTERNAL DIMENSION AND DESCRIPT ION OF PARTS

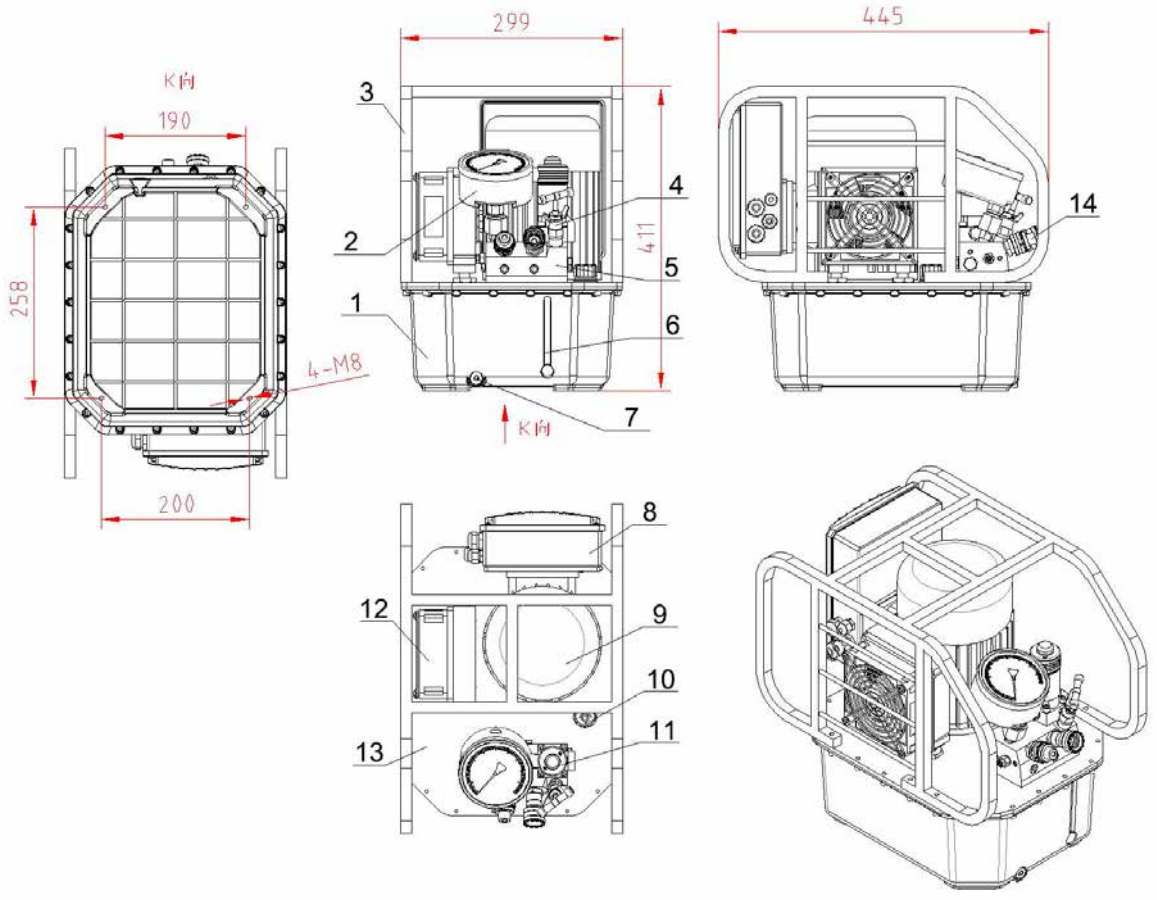

Item	Description	Item	Description
1	Oil Reservoir	8	Electrical Control System
2	Gauge	9	Motor
3	Frame For Protecting	10	Oil Filling Port
4	Regulating Valve	11	Solenoid Valve
5	Valve Assembly	12	Cooler
6	Oil Lever Measure	13	Tank Cover
7	Oil Releasing Port	14	Coupler

PUMP BODY ASSEMBLY

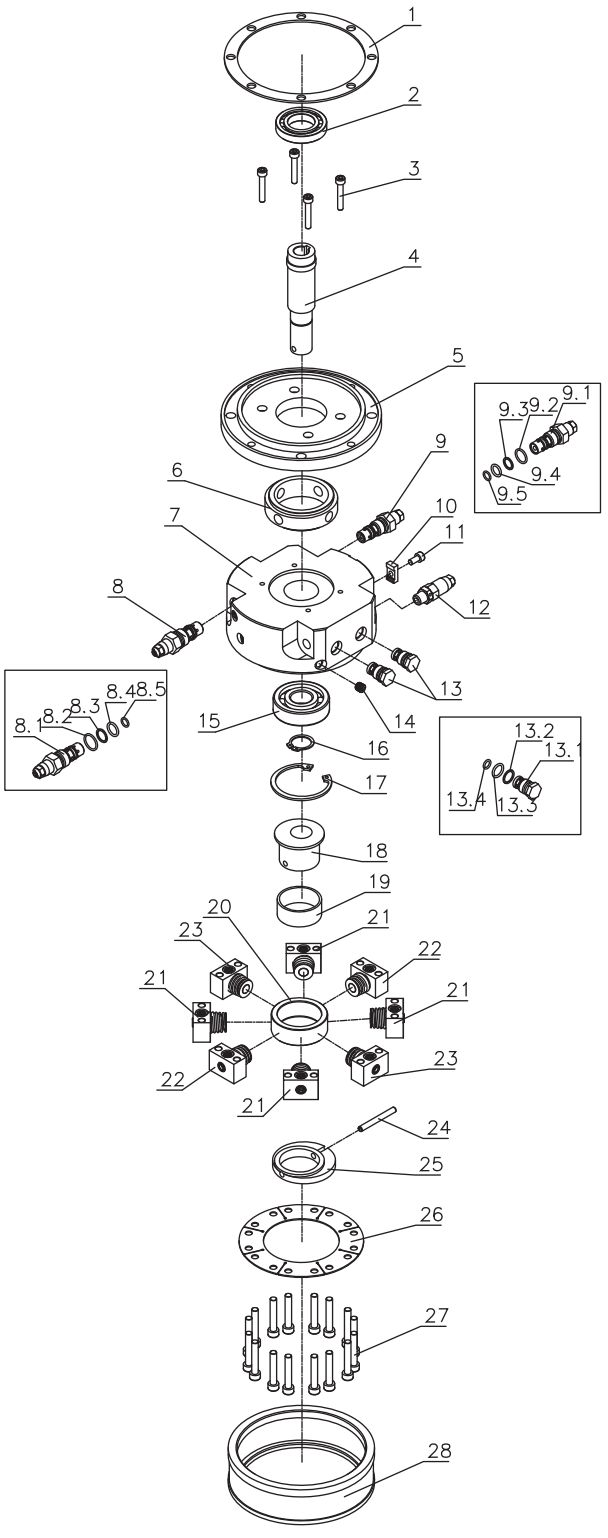

Item	Description	Quantity
1	Seal Gasket	1
2	Bearing	1
3	Screw	4
4	Connecting Axis	1
5	Flange	1
6	Metal Sleeve	1
7	Pump Body	1
8	Relief Valve(Low)	1
8.1	Valve Body	1
8.2	O-Ring	1
8.3	Retaining Ring	1
8.4	O-Ring	1
8.5	O-Ring	1
9	Relief Valve(Middle)	1
9.1	Valve Body	1
9.2	O-Ring	1
9.3	Retaining Ring	1
9.4	O-Ring	1
9.5	O-Ring	1
10	Filter Fixer	1
11	Screw	1
12	Safety Valve	1
13	Check Valve	2
13.1	Valve Body	1
13.2	Retaining Ring	1
13.3	O-Ring	1
13.4	O-Ring	1
14	Screw Plug	12
15	Bearing	1
16	Metal Retaining Ring	1
17	Metal Retaining Ring	1
18	Metal Sleeve	1
19	Copper Sleeve	1
20	Axis Sleeve	1
21	Piston	4
22	Piston	2
23	Piston	2
24	Spring Pin	1
25	Metal Block	1
26	Connecting Gasket	1
27	Screw	16
28	Filter	1

VALVE ASSEMBLY

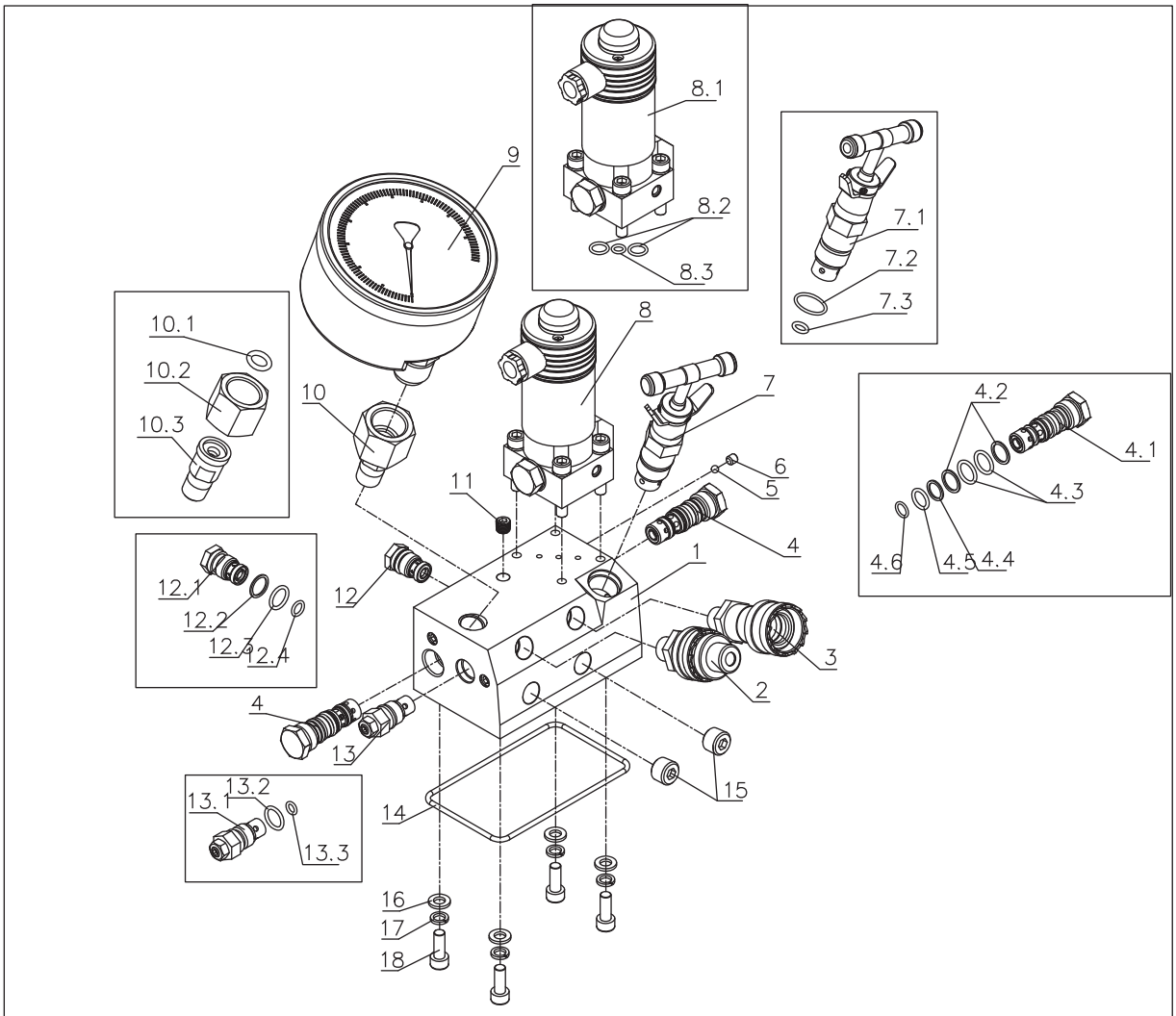

Item	Description	Quantity	Item	Description	Quantity
1	Valve Block	1	9	Gauge 100Mpa	1
2	Male Coupler	1	10	Connector	1
3	Famale Coupler	1	10.1	O-Ring	1
4	Reversing Valve	2	10.2	Connecting Fitting	1
4.1	Valve Body	1	10.3	Connecting Fitting	1
4.2	Retaining Ring	2	11	Screw Plug	13
4.3	O-Ring	2	12	Check Valve	1
4.4	Retaining Ring	1	12.1	Valve Body	1
4.5	O-Ring	1	12.2	Retaining Ring	1
4.6	O-Ring	1	12.3	O-Ring	1
5	Steel Ball	5	12.4	O-Ring	1
6	Screw	5	13	Low Pressure Valve	1
7	Regulating Valve	1	13.1	Valve Body	1
7.1	Valve Body	1	13.2	O-Ring	1
7.2	O-Ring	1	13.3	O-Ring	1
7.3	O-Ring	1	14	O-Ring	1
8	Solenoid Valve	1	15	Plug	2
8.1	Valve Body	1	16	Gasket	4
8.2	O-Ring	2	17	Spring Gasket	4
8.3	O-Ring	1	18	Screw	4

HYDRAULIC PRINCIPLE

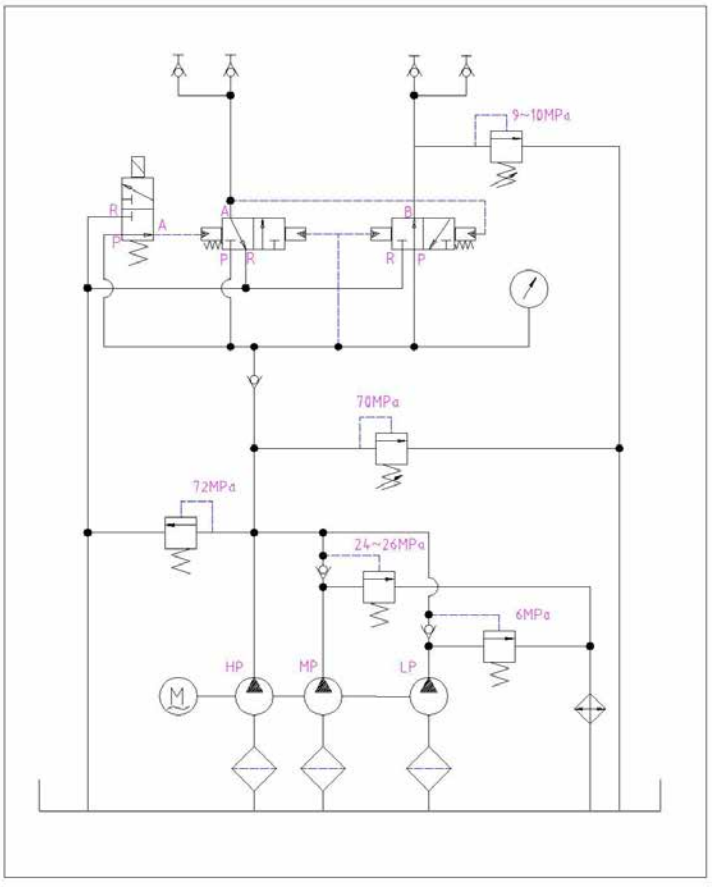

WARNING FOR USING HIGH PRESSURE HOSE

1. Please use Wren's JH series high pressure hoses.
2. The minimum bending radius: R>120mm. Too small bending radius will destroy the high pressure hoses.
3. The maximum operating pressure is 70 Mpa, and it is forbidden overpass the pressure.
4. Do not tighten hoses excessively. Over tightening can cause to premature thread failure or high pressure fittings to split at a pressure lower than their rated capacities.
5. Should any hydraulic hose rupture, burst, or need to be disconnected, immediately shut off the pump. Never attempt to grasp a leaking pressurized hose with your hands. The force of escaping hydraulic fluid could cause serious injury.
6. Do not use the hose to remove attached equipment. Stress can damage the hose, causing personal injury.
7. Do not subject the hose to potential hazard such as fire, sharp surfaces, extreme heat or cold or heavy impact. Do not kink, twist, or bend the hose so tightly that oil flowing in the hose is blocked or reduced. Periodically inspect the hose for wearing, because any of these conditions can damage the hose.
8. WREN JH series 100Mpa high pressure hose's operating pressure is 70 Mpa, Overpass this Pressure is forbidden.

AFTER-SALES SERNICE

1. WREN guarantees quality of the material used for manufacturing products and quality of your technical fulfillment. The guarantee period of the products is 12 months from the date of Selling(subject to the contract).
2. If any quality issue due to the defects of the materials or craftsmanship is found within the guarantee period. WREN will be responsible and repair or replace the defective products for free.
3. If the equipment is damaged because of happenstance, wrong operating and modifying or repairing the parts without consulting WREN's technical service department, WREN will not guarantee these cases.

EC DECLARATION OF CONFORMITY

THIS IS HEREBY DECLARED THAT FOLLOWING DESIGNATED PRODUCT COMPLIED WITH THE ESSENTIAL HEALTH AND SAFETY REQUIREMENTS OF MACHINERY DIRECTIVE 2006/42/EC ON THE APPROXIMATION OF THE LAWS OF THE MEMBER STATES RELATING TO IT.

MANUFACTURER

Hangzhou WREN Hydraulic Equipment Manufacturing Co.,Ltd
ADD：No.24, Xingxing Road, xingqiao,yuhang district , Hangzhou, China

AUTHORIZED REPRESENTATIVE TO HOLD THE TECHNICAL FILES

Name of authorized person: Fritz Fischer
Address of authorized person: PETER ROSEGGERSTR.12, GERMANY 85293, REICHERTSHAUSEN
MAILBOX: hstfischer@t-online.de

DESCRIPTION OF MACHINERY

PRODUCT NAME: HYDRAULIC PUMP
MODEL TYPE:KLW4000 Series/KLW4110 Series/KLW4000N Series/ LP3 Series /SMP Series /HNP Series/SHNP Series

APPLICABLE STANDARD

EN ISO 12100:2010
EN ISO 4413:2010

THIS DECLARATION APPLIES TO ALL SPECIMENS MANUFACTURED IDENTICAL TO THE MODEL SUBMITTED FOR TESTING/EVALUATION.ASSESSMENT OF COMPLIANCE OF THE PRODUCT WITH THE REQUIREMENTS RELATING TO SAFETY STANDARDS LISTED ABOVE WAS PERFORMED BY MANUFACTURE.

SIGNED ON BEHALF OF MANUFACTURER

SIGNATURE: 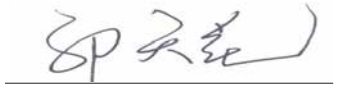

TITLE: Manager

PLACE: Hangzhou

DATE: 2012/8/9

WREN

HYDRAULIC TOOL

For prompt service,
contact you Authorized
WREN Agent

All Wren products are guaranteed against defects in workmanship and materials for as long as you own them.Under this guarantee, free repair or replacement will be made to your satisfation.

RECYCLED
PAPER

KLW4120系列液压扳手专用自动泵
操作和维护手册



雷恩液压

本操作手册内容包括KLW4120液压扳手专用自动泵的操作规程、 警告和注意事项以及故障排除。使用前，请仔细阅读本手册，彻底理解其内容并妥善保管。

安全指示

液压电动泵的安全使用，必须要求正确操作和定期检查。
在阅读和彻底理解本手册中的安全指示条例后才可以使用本气动泵。
▲注意事项--防止造成直接经济损失或财物损失。
▲警告事项--防止造成人身伤害。
请确实遵守上述两个事项。
在使用过程中，如发生异常情况，请关闭气源，拔出气源接头，然后向WREN或WREN授权代理商咨。

1.使用本电动泵时，所有人员禁止站在液压油出口处，防止液压油不小心泄漏时可能发生的人身伤害或财产损失；电动泵必须远离火源。

2.加压前，应加装软管或快速接头，防止高压液压油冲出造成人身伤害。

3.本液压电动泵的最高工作压力为70Mpa；在出厂时工厂已设定压力为70Mpa。绝不要将压力调节到超过设定压力。

4.如本电动泵用于操作其它配套设备，配套设备的工作压力应小于70Mpa， 并将压力调定为其配套设备的工作压力，否则配套设备有可能损坏；调整压力调节阀的操作参见第六、七项。

5.充分考虑安全性，在维修前，应将电器设备的电源切断。

6.在插上电源前，关掉按钮开关；如果开着开关，压力会增加。

7.确保接地，避免触电。

8.不要改装本电动泵；如确实需要改装，应先向WREN或WREN授权代理商咨询。 没有WREN的书面同意，所作改装，不在质保范围内。

9.不要加注超过可用油量的液压油，否则，贮油箱中的压力会增加或溢出，贮油箱有可能损坏、会造成对环境的污染。

10.按下自动操作按钮，则自动循环开始，按钮开关弹起则自动程序停止。紧急状态下，则必须首先切断电机电源。

11.扳手及液压泵之间是由工作压力均为700bar的钢丝编织的复式油管连接的。每根油管的两端均有凹接头以及凸接头，以保证泵与扳手之间的正确连接。不得随意变动旋转接头上的任何螺栓。 这是厂家为了安全而设定的。只有受过专业培训者才能去调节。

12.拧紧快速接头；如果拧的不够紧设备不会正常工作；如果在同步系统中，会造成其中一台或多台设备不能正常工作。如果出现这种情况，快速接头、设备可能损坏，可能会造成人身伤害。

13.电器盒上有闪烁灯。如果灯亮，则说明电路故障。平时指示灯不工作。如果出现灯亮要及时修理。

14.远离超高压液压油可能喷出的位置；液压油可能穿透你的手，导致严重受伤。

15.如果液压油喷到你的眼睛里，立即用清水冲洗大约15分钟，然后去医院洁眼睛。

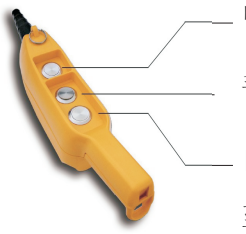

注意事项

1. 只使用WREN液压工具专用油。
2. 不要将压力调节阀当作一般的调整阀或释放阀使用。
3. 要按照防污调理处理使用过后的废旧液压油

注意事项

1.1KLW4120为液压扳手专用泵采用集成方式组装；由油泵、控制阀、油箱、电机、冷却器、仪表等组成的一种独立完整的液压装置，具有体积小、重量轻、结构简单、操作方便、工作压力高等特点。泵为高、低压油泵同时供油，可获得较大的输出油量。高压时，低压泵经卸荷溢流阀自动空载回油，可减少功率消耗，并且（A）口出油压力可70～700Bar任意调节。

1.2液压电动泵使用的液压油： 油箱内必须注入足量的标准为国标32#（冬季）或36#（夏季）液压专用油，应干净无杂志。 在加注液压油要使用过滤网进行过滤。在正常的使用情况下，应每6个月更换一次液压油。

1.3液压电动泵使用的环境温度：-10～60℃

1.4请使用WREN高压软管、高压接头等。WREN液压电动泵配用的高压软管最大工作压力为100Mpa，使用时请选用与之配套的压力系统。

1.5此泵如需使用附属液压产品，请咨询WREN公司工程师。

1.6 请不要在靠近火焰处使用液压电动泵。

1.7 请不要任意调节压力调节阀，以避免超高压引起的设备损坏和人身伤害。

KLW4120自动泵

外观尺寸零部件概述

序列号	名称	序列号
1	贮油箱	
2	压力表	
3	把手架	
4	电磁阀	
5	通气注油口	
6	油位计	
7	排油孔	

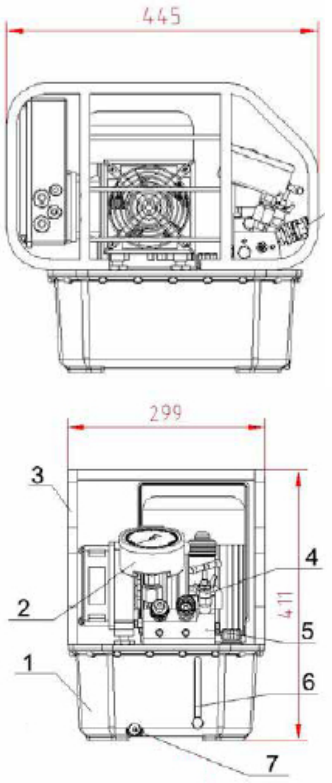

零部件概述

1 储油箱：存放工作用液压油，保证系统正常工作（必须有足够油量）提供系统所需的压力载体。

2 压力调节阀（溢流阀）：调节此阀可以设定液压泵的工作压力，（出厂时已锁定最高工作压力，禁止调高锁定压力）。

3 压力表：显示液压泵的工作压力，量程100Mpa。

4 油泵保护架：安装在储油箱上，用于提携、保护液压泵站。

5 电机：提供动力源（根据使用地的电压、频率选用合适电机，具体参数见电机铭牌）。

6 冷却器：实行强制冷却，降低油泵工作时的油温，从而延长扳手工作时间和使用寿命。

7 电磁阀：实现高压液压油输出、回油控制、压力输出回油切换等功 能； 实现最高压力设定，保护系统在设定压力下正常工作。输出口油口尺寸：NPT1/4 " 。
8 压力表：表量程70 Mpa(10000 psi，即油泵的最高工作压力。
9 油泵保护架：安装在油箱上，用于提携保护气动泵站。
10 快速接头：实现液压油输出\回油功能，快速连接油管；内置式单向阀。
11 压力调节阀(溢流阀：限制泵站最高工作压力或调整到所需工作压力并锁定(禁止任意调整此阀。
12 液位计：观察液压油的多少，以保证提供最佳使用油量；液压油低于油标1/3位置时，必须加WREN泵站专用液压油，否则可能会损坏泵站。
13 卸油孔：螺塞G1/4 " ，实现液压油排出储油箱(更换液压油时使用。
14 六角螺钉：密封连接油箱。
15 油箱盖：密封油箱。
16 通气注油孔： 实现液压油排出储油箱(更换液压油时使用；油盖设计有通气空孔功能，注油时拧开油盖，内有过滤网保证无杂质进入油箱；拧紧油盖后确保系统中的空气顺利排出。

特性

1 KLW4120是三级泵。 高压出口设有高压溢流阀，低压出口设定压力为5-7Mpa，在70Mpa状态下流量为0.8L/m。
2 最大操作压力：70Mpa
3 流量：该泵为双作用设计，即可同时使用两部扳手。
4 马达：220V/50Hz
5 使用温度： 80~-30° C
6 储油箱规格（油箱型号）：445×299×411
7 重量：26.5Kg
8 液压油： ISO VG 46#
在使用一组扳手时，必须将另外一组快速接头盖紧金属帽。

警告和警告标志

警告

1 使用时，泵站高压油输出口处禁止站人，调压时输出口必须连接其他元件。
2 泵站使用时，禁止随意调高超出本泵的最大工作压力，否则会造成泵站的损坏。
3 需要检查电机时，必须切断电源。
4 泵站工作时，返回储油箱的油可能会增压;如果此时打开储油箱盖可能会造成不必要的损伤和伤害。
5 禁止无油启动泵站，这将会造成泵站损坏。
6 必须保持液压泵站的清洁，特别是注油口、快速接头等处，由于液压油的不清洁，是引发泵站的故障的主要原因。
7 建议：液压油一年必须更换一次（不经常使用状态下）。

警告标志

警告标志如下表所示

警告标志	意义	粘贴位置
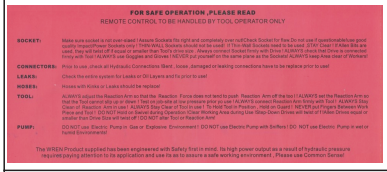	请阅读安全条例	油箱侧面
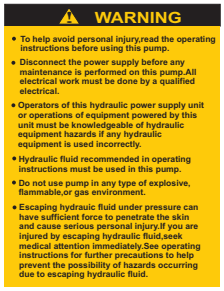	警告	油箱正面

保养检查

1. 使用前检查事项

1.1 检查电源连接线部位是否有松脱、连接不良的情况，如发现电源接线部位有松脱现象，应将松脱的部位拧紧。

1.2 请检查液压油的油量是否达到规定的值，不足时请即时添加。

1.3 切换方向控制阀时机具做工，加压检查有无异常。

1.4 检查配管或设备是否有漏油现象，如有此类现象发生，请查明原因并对此进行处理。

2. 操作中的检查事项

在检查下列项目中，如果发现有异常情况，请立即停机，处理故障

2.1 在升压过程中是否有异常情况。

2.2 配管及设备是否有漏油现象。

2.3 电机在工作中是否有异常燥声、振动及异味。

2.4 液压油是否温度过高。

3. 操作后的检查事项

3.1 必须切断电源。

3.2 检查是否有漏油或者其他异常情况。如果有异常情况发生，请查明原因并进行处理。

3.3 使用后请进行清理。

4. 关于更换液压油

液压油原则上应每年更换两次。如出现下列这些情况，请立即更换。

4.1 灰尘进入时。

4.2 有异味时。

4.3 有水进入时，使油液呈现出乳白色。

4.4 油劣化显现出黑褐色时。

5. 液压油更换方法

5.1 松动打开气动泵上的通气注油盖。

5.2 取下油箱侧面的螺钉，使液压油流出。

5.3 清洁油箱内部及吸入口的过滤网。安装排油口的螺钉，将油加入油箱。

警告： 废弃的液压油属于工业废料，应委托具有收集和处理工业废料的公司处理。

警告： 如果油液溅到您的眼睛里，应立即用清水冲洗至少15分钟，冲洗完毕后应立即去看医生。如果油液飞溅到您的皮肤上，请用清水和肥皂清洗。

噪音及运输

1、KLW4120系列泵噪音/振动声明

KLW4120使用噪音值：≤70db

2、KLW4120系列泵运输信息

2.1 搬运时注意轻拿轻放。

2.2 装运时应将产品立式向上，如下图所示。

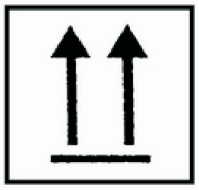

2.3 产品搬运一般采用手提式或小车搬运移动、吊装移动，如下图所示。

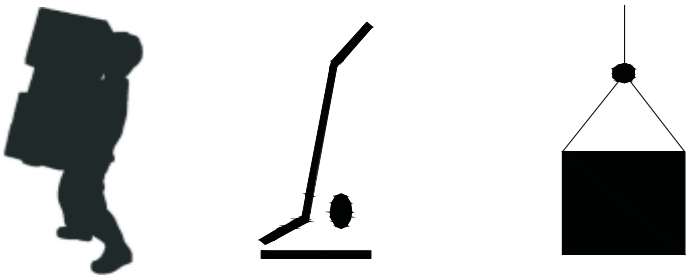

操作方法（压力调整）

1.先将油箱充满标准干净的液压油，液压油应采用国标32#（冬季）或46#（夏季），当加注的液压油达到液压泵油箱上的油窗所示警戒线时，即刻停止加注，同时旋紧油箱上方的加油孔盖。

2.检查和接好进油和回油橡胶高压软管。注意查看油管与泵体之间、油管和工作机械之间的接头是否完好、紧合。

3.检查并接好主电源线，检查电源线路和各电器元件，是否完好。如：压力表、电机、自动化电器控制箱等，防止在运输过程当中有损坏。

4.启动电源开关，按下电机开关，让整个泵站在非工作的情况下自动运行2-3分钟。 此时，泵站内应正在将内部的空气排出，同时请注意观看电机是否正常运转、整个泵体有无异常声响或震动。

5.经过以上的准备工作，如没有发现有任何异常现象即说明泵站的基本工作是正常的。此时将手柄手手动操作按钮按下，反复几次排清高压软管中空气。

6.在按下手动按钮时候要注意观察压力表指针是否向上抬升， 否则说明泵站的压力工作情况不正常，请捡查排查故障。

7.按下手动按钮，调节调压阀至设定压力。

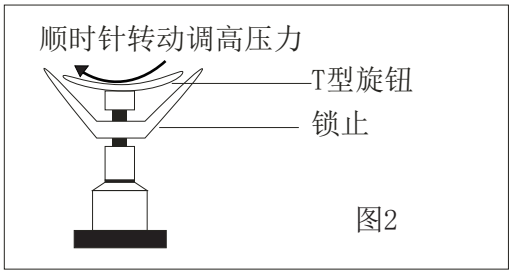

图2

液压泵的故障排除

引起的故障	可能引起故障的原因	解决方法
无法启动泵站	电源电压不符	确定电源电压是否 符合泵站规定要求
	电源未接通	检查电源、电源连接部等， 接通电源
系统无压力	快速接头未接到位	拆开，重新安装
	贮油箱内无油	加注油
	贮油箱内油量不足	加注油
	系统带有节流阀、手动单向阀的，检查阀是否打开	打开节流阀、手动单向阀， 确定系统为通路状态
重装快速接头，系统无压力	快速接头无法接到位， 引起系统内敝压	拆开快速接头，用顶杆检查快速接头钢球是否有弹性，如顶不动，用小锤敲击钢球，使雾状液压油排尽
快速接头处漏油	快速接头掏"0”型圈、挡圈磨损	更换快速接头
系统压力达不到额定压力	溢流阀调整得过低	压力表检测，溢流阀调至系统额值
	水油混合	换油
	贮油箱内油量不足	加注油
	吸入空气	系统反复空运转数次，排尽空气
	节流阀、手动单向阀未关紧	锁紧阀
	节流阀、手动单向阀未调整到位	调整至正确位置
	节流阀、手动单向阀损坏	更换阀
	液压油中含有杂质	清洗泵站阀块并更换清洁液压油
静压使用时，压力缓慢下降	密封失灵，检查各密封处	更换密封件

液压泵爆炸图

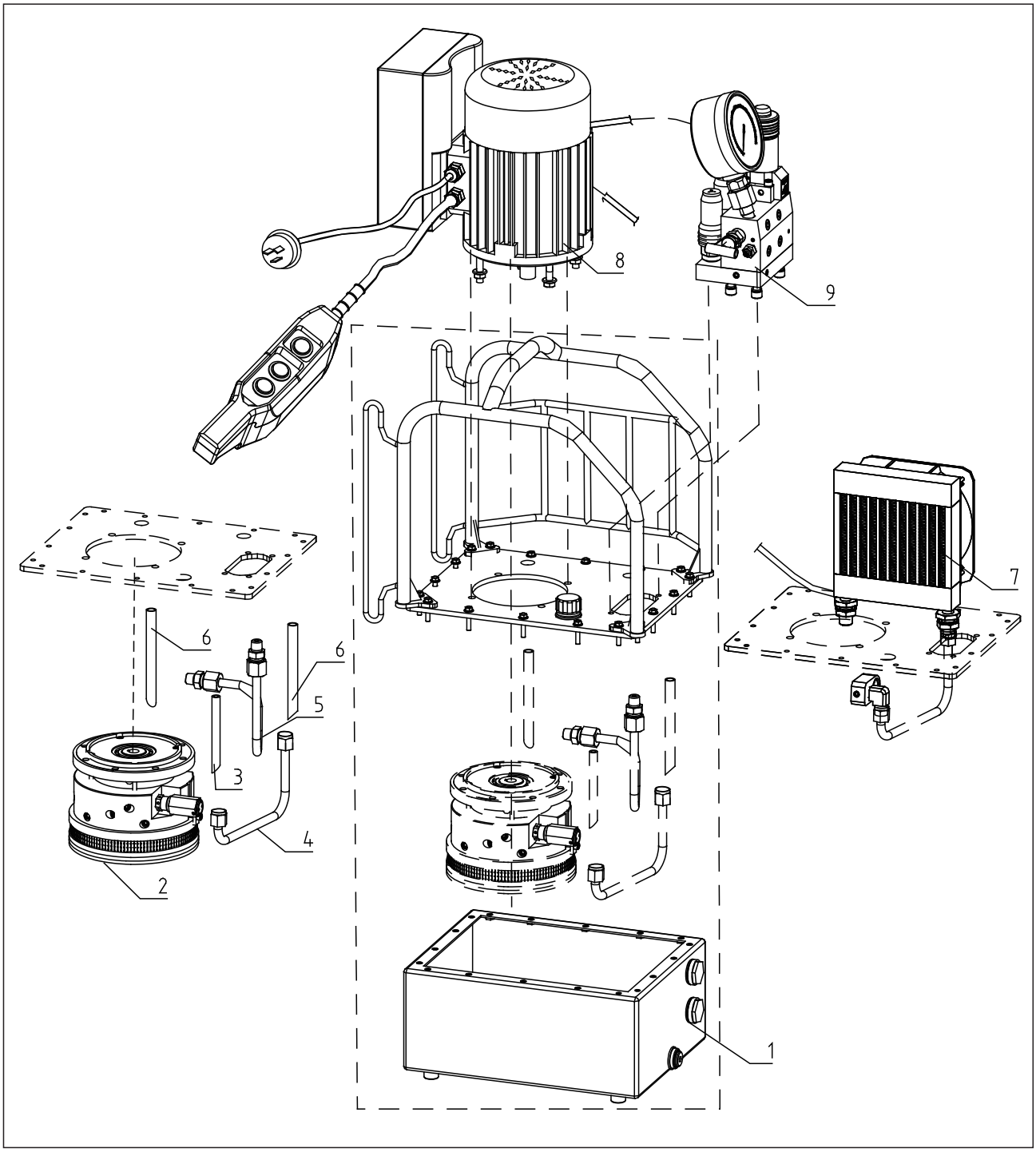

序列号	名称	序列号	名称
1	油箱模块	7	冷却器模块
2	泵体模块	8	电动控制阀块
3	回油管(1)	9	液压控制阀模块
4	输油管		
5	输油管(2)		
6	回油管（2）		

泵体模块爆炸图

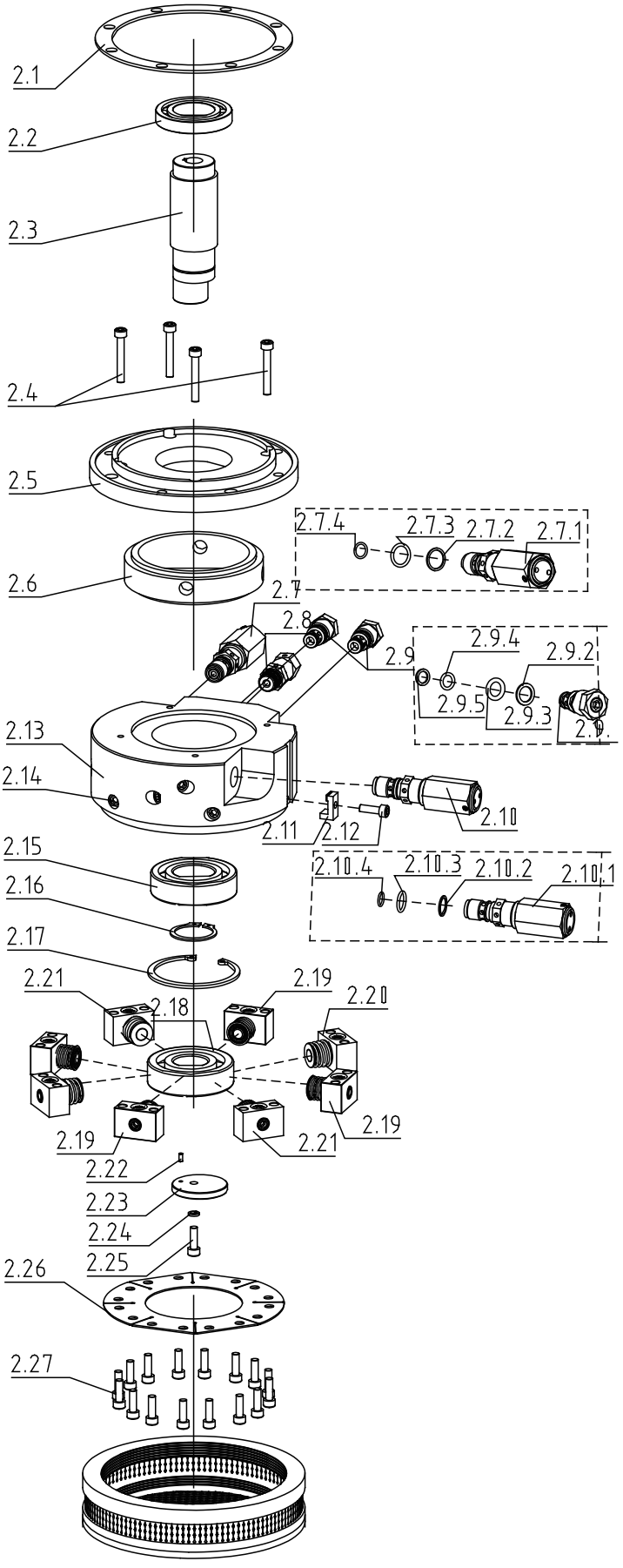

序列号	名称	数量
2.1	密封件	1
2.2	深沟球轴承	1
2.3	泵轴	1
2.4	螺钉	4
2.5	泵体法兰	1
2.6	泵体套	1
2.7	卸荷阀(1)	1
2.7.1	卸荷阀泵体	1/1
2.7.2	挡圈	1/1
2.7.3	0 型圈	1/1
2.7.4	0 型圈	1/1
2.8	超压阀	1
2.9	单向阀	2
2.9.1	单向阀本体	1/1
2.9.2	挡圈	1/1
2.9.3	0 型圈	1/1
2.9.4	0 型圈	1/1
2.9.5	挡圈	1/1
2.10	卸荷阀(2)	1
2.10.1	卸荷阀本体	1/1
2.10.2	挡圈	1/1
2.10.3	0 型圈	1/1
2.10.4	0 型圈	1/1
2.11	滤网挡板	1
2.12	螺钉	1
2.13	分离式泵体	1
2.14	堵头	10
2.15	深沟球轴承	1
2.16	轴用弹性挡圈	1
2.17	孔用弹性挡圈	1
2.18	深沟球轴承	1
2.19	柱塞副1	4
2.20	柱塞副 2	2
2.21	柱塞副 3	2
2.22	销	1
2.23	轴承端板	1
2.24	弹性垫圈	1
2.25	螺钉	1
2.26	连接片	1
2.27	螺钉	16
2.28	滤网	1

WE型阀组模块爆炸图

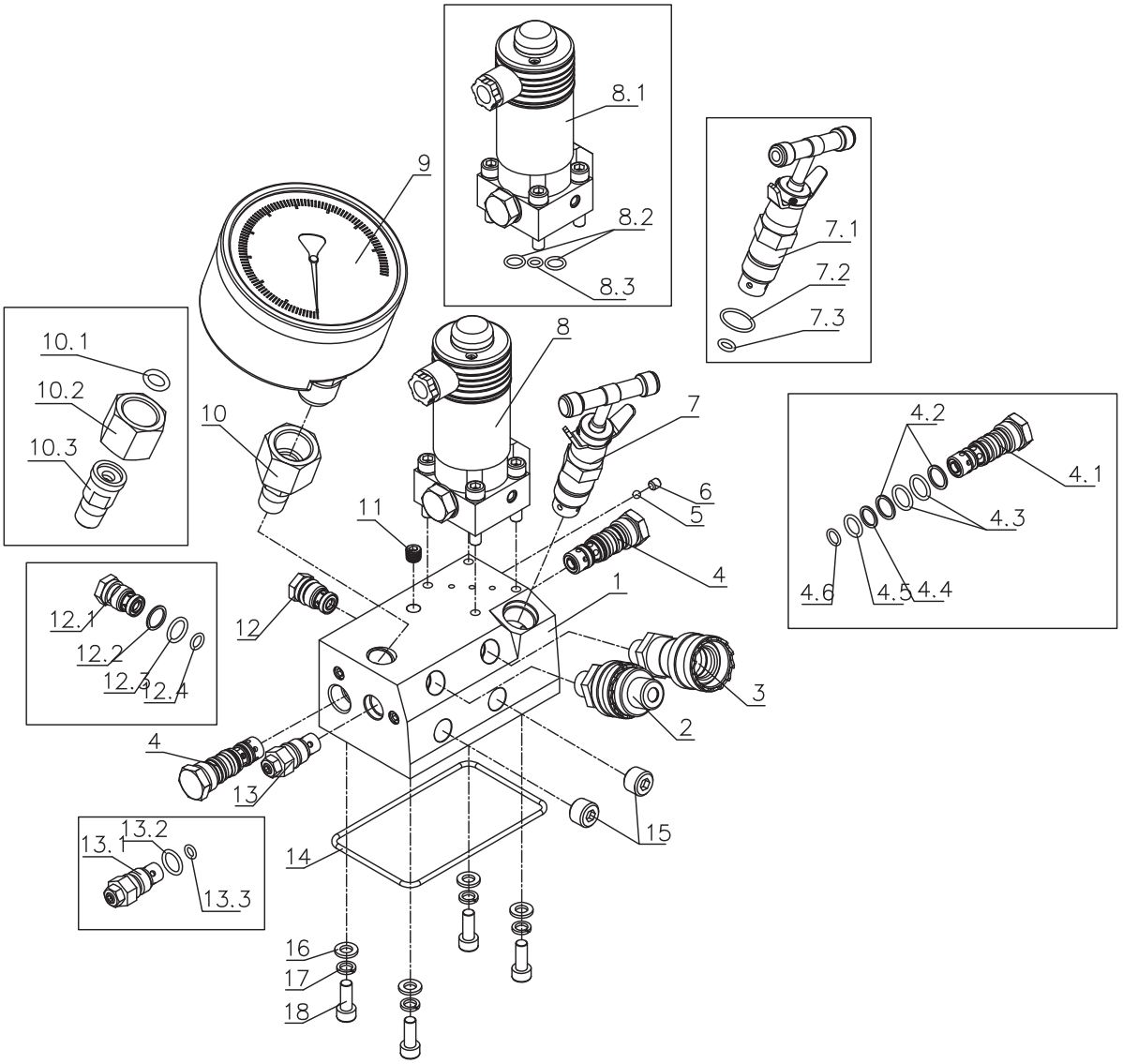

序列号	名称	数量	序列号	名称	数量	序列号	名称	数量	序列号	名称	数量
9.1	WE连接块	1	9.4.3	0 型圈	1/1	9.8.3	0 型圈	1/1	9.19	连接块扩展板	1
9.2	堵头	12	9.4.4	0 型圈	1/1	9.9	调压阀2	1	9.20	堵头	3
9.3	先导换向阀	2	9.5	电动换向阀	1	9.9.1	调压阀本体	1/1	9.21	钢球	1
9.3.1	换向阀本体	1/1	9.5.1	换向阀本体	1/1	9.9.2	0 型圈	1/1	9.22	弹簧	1
9.3.2	挡圈	1/1	9.5.2	0 型圈	2/1	9.9.3	0 型圈	1/1	9.23	堵头	1
9.3.3	0 型圈	1/1	9.5.3	0 型圈	1/1	9.10	凹快速接头	1	9.24	堵头	1
9.3.4	0 型圈	1/1	9.6	压力表100MPa	1	9.11	凸快速接头	1	9.25	螺钉	2
9.3.5	挡圈	1/1	9.7	压力表接头	1	9.12	堵头NPT1/4	4	9.26	平垫圈	4
9.3.6	挡圈	1/1	9.7.1	压力表接头(G1/2)	1/1	9.13	0型圈	2	9.27	弹性垫圈	4
9.3.7	0 型圈	1/1	9.7.2	压力表接头(G1/2)	1/1	9.14	0型圈	1	9.28	螺钉	4
9.3.8	0 型圈	1/1	9.7.3	0 型圈	1/1	9.15	密封圈	2			
9.4	单向阀	1	9.8	调压阀1	1	9.16	压力继电器1	1			
9.4.1	单向阀本体	1/1	9.8.1	调压阀本体	1/1	9.17	压力继电器2	1			
9.4.2	挡圈	1/1	9.8.2	0 型圈	1/1	9.17	组合垫片	2			

自动液压泵——电路控制原理图

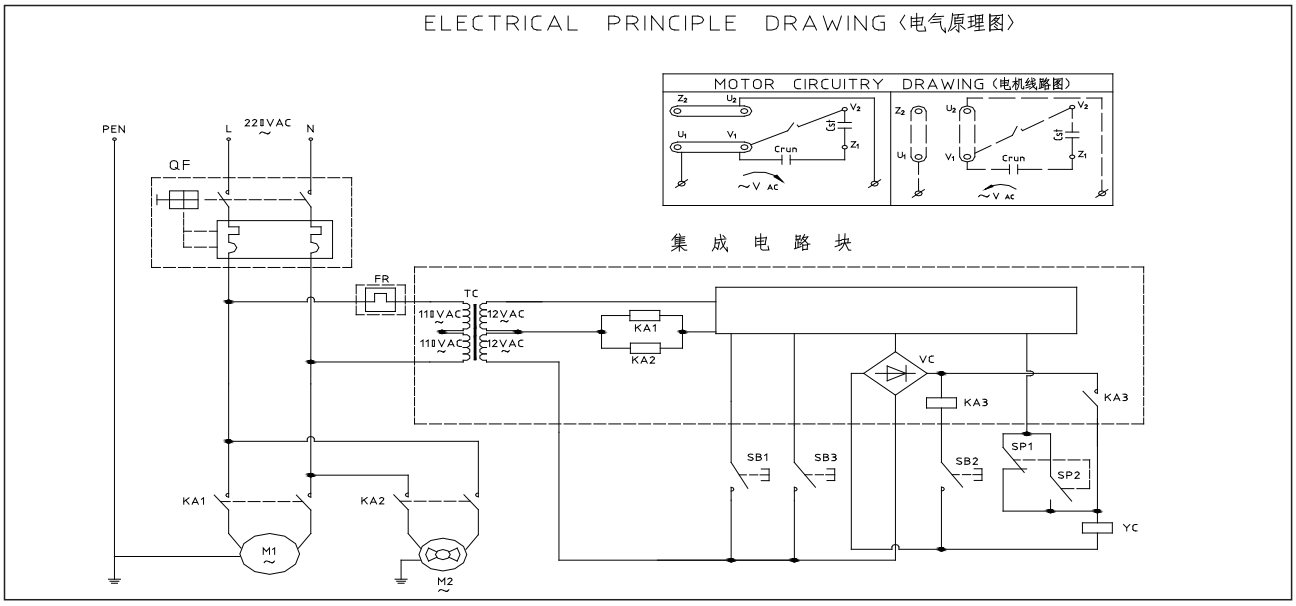

工作元件 / 控制元件	M1电机	M2电机	SB 1	SB 2	SB 3	YC 线圈	SP 1	SP 2
自复SB1(+)	—	—		O	O	O	O	O
自复SB1(-)	O	O		O	O	O	O	O
自复SB2(+)	+	+	O		O		O	O
自复SB2(-)	O	O	O		O		O	O
自复SB3(+)	O	O	O	O		自动切换	自动切换	自动切换
自复SB3(-)	O	O	O	O		—	O	O
压力继电器SP1(+)	O	O	O	O	+	+		—
压力继电器SP1(-)	O	O	O	O	+	—		—
压力继电器SP2(+)	O	O	O	O	+	+	—	
压力继电器SP2(-)	O	O	O	O	+	—	—	

备注: + 表示连接、工作　　- 表示断开、停止　　0表示无联系、无作用

自动泵液压原理图

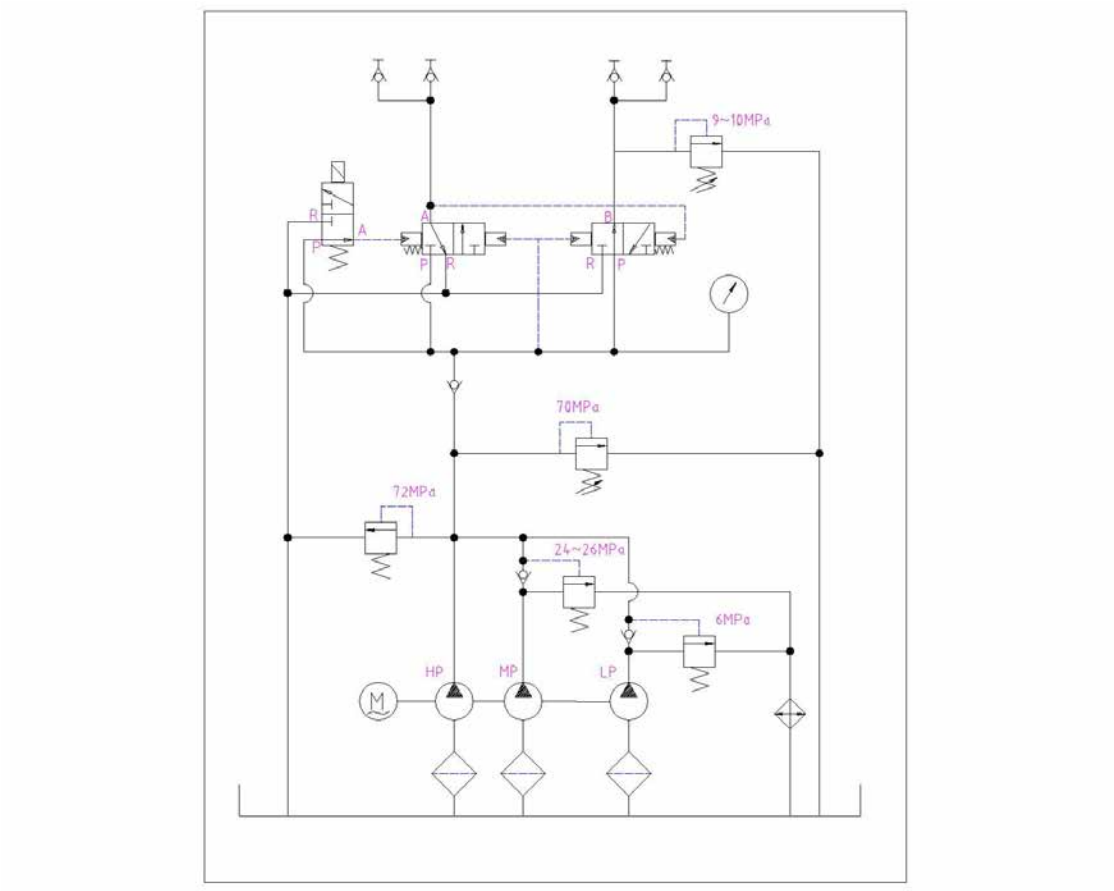

高压软管使用警告

1.适用于WREN Jh系列等级的高压软管。
2.最小弯曲半径：R>120mm。过小的弯曲半径，将严重损坏高压软管。
3.操作压力为70Mpa，禁止超压使用。
4.操作中不得使软管缠绕，否则会使油管生产过大的背压，使软管内部损坏，软管过早报。
5.不得将重物掉到或压到软管上；严重冲击可能引起软管损坏，使用时将会暴裂，并引起人身伤害。
6.不得用软管拖、拉、吊起重物。
7.禁止在过热、火焰、机器辗轧、利刃和化学腐蚀等条件环境下使用。软管布置在通道上时，必须加装盖板。
8 .WREN JH系列100Mpa等级高压软管操作压力为100Mpa，禁止超高压使用，

售后服务

1.自客户购买WREN品牌液压机具产品之日起，WREN公司为用户提供十二个月的保质期。
2.WREN产品在保质期，内因材料、制造缺陷引起的质量问题，由WREN公司免费便换、维修。
3.因工作状况不符合规定、意外事故、滥用、操作不当、未经受权的产品改装或修理以及不按规范操作而引起的产品损坏，不属本保修范围。

自动泵电气互连图

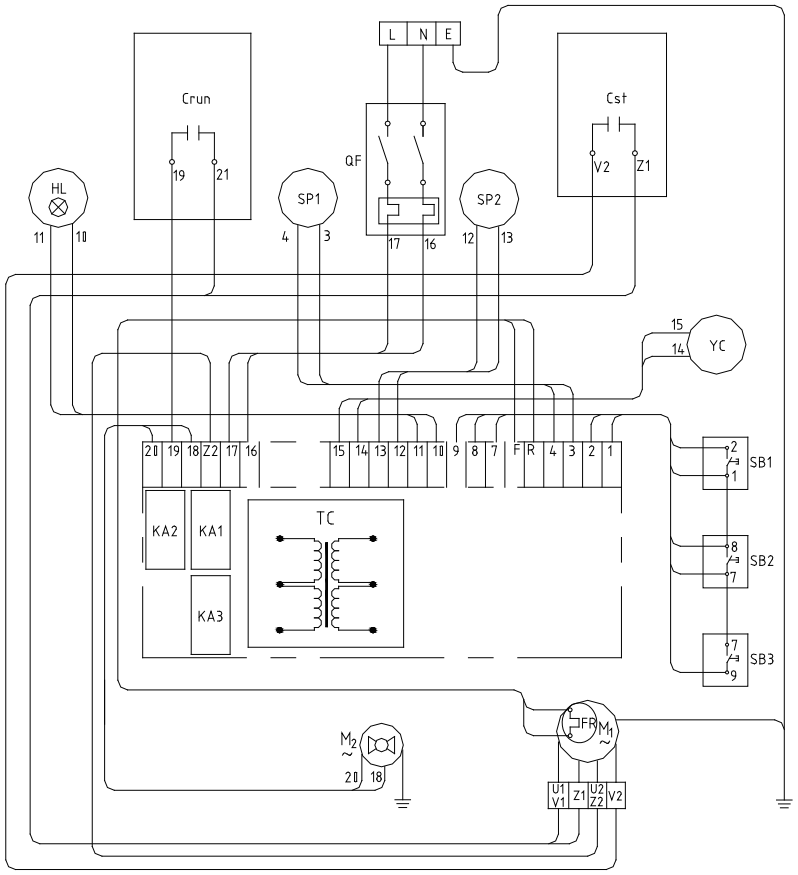

自动泵型号参数表

型号	油箱容积(L)	控制阀	电机（电压/频率/转速）	功率(Kw)	压力(L/min)			出油接口	回油接口	最大工作压力（MPa）
					低	中	高			
KLW4120	7	E	200～230V/50HZ/2Pole/Single Phase(7.0A, 2795r/min)	1	7	1.6	0.8	NPT1/4	NPT1/4	70
KLW4120A	7	E	200～240V/50HZ/2Pole/Single Phase(7.2A, 2800r/min)	1.1	7	1.6	0.8	NPT1/4	NPT1/4	70
KLW4120B	7	E	200～240V/60HZ/4Pole/Single Phase(6.2A, 1720r/min)	0.9	5.5	1.4	0.7	NPT1/4	NPT1/4	70
KLW4120C	7	E	100～120V/50HZ/2Pole/Single Phase(13A, 2800r/min)	1.1	7	1.6	0.8	NPT1/4	NPT1/4	70
KLW4120D	7	E	100～130V/60HZ/4Pole/Single Phase(13.1A, 1675r/min)	0.9	5.5	1.4	0.7	NPT1/4	NPT1/4	70

国际单位换算公式

长度				
国际单位	转换系数	非国际单位	转换系数	国际单位
毫米（mm）	×0.03937	寸	×25.4	毫米
厘米（cm）	×0.3937	寸	×2.51	厘米
米（m）	×1.0936	码	×0.944	米
千米（km）	×0.62	里	×1.61	公里
面积				
国际单位	转换系数	非国际单位	转换系数	国际单位
平方毫米（mm^2）	×0.00155	平方英寸	×645	平方毫米
平方厘米（cm^2）	×0.155	平方英寸	×6.45	平方厘米
平方米（m^2）	×10.8	平方英尺	×0.0929	平方米
平方米（m^2）	×1.2	平方码	×0.836	平方米
公顷（ha）	×2.47	英亩	×0.405	公顷
平方千米（km^2）	×0.39	平方英里	×2.59	平方千米
容积				
国际单位	转换系数	非国际单位	转换系数	国际单位
立方厘米（cm^3）	×0.061	立方英寸	×16.4	立方厘米
升（L）	×61	立方英寸	×0.016	1升
毫升（ML）	×0.034	盎司-流体	×29.6	毫升
升（L）	×1.06	夸脱	×0.946	1升
升（L）	×0.26	加仑	×3.79	1升
立方米（m^3）	×1.3	立方码	×0.76	立方米
质量				
国际单位	转换系数	非国际单位	转换系数	国际单位
克（g）	×0.035	盎司	×28.36	克
千克（kg）	×2.2	磅	×0.454	公斤
公吨（t）	×1.1	短吨	×0.907	吨
力				
国际单位	转换系数	非国际单位	转换系数	国际单位
牛顿(N)	×0.225	磅	×4.45	牛顿
千牛（KN）	×225	磅	×0.00445	千牛顿
扭矩				
国际单位	转换系数	非国际单位	转换系数	国际单位
牛顿.米（N.M）	×8.9	磅.英寸	×0.113	牛顿.米
牛顿.米（N.M）	×0.74	磅.英尺	×1.36	牛顿.米
压强				
国际单位	转换系数	非国际单位	转换系数	国际单位
千帕（kpa）	×4	英寸水柱	×0.249	千帕
千帕（kpa）	×0.3	英寸汞柱	×3.38	千帕
千帕（kpa）	×0.145	磅/英寸2	×6.89	千帕
兆帕（Mpa）	×145	磅/英寸2	×0.00689	兆帕
巴（Bar）	×14.5	磅/英寸2	×0.0689	巴
功率				
千瓦（kw）	×1.34	马力	×0.746	千瓦
瓦特（w）	×0.74	英寸磅/秒	×1.36	瓦
温度				
℃=（F-32）÷1.8			F=（℃×1.8）+32	

所有雷恩产品都确保无工艺和材料上的缺陷，只要你拥有它。
在此担保下，我们将在产品售出后一年时间内为您提供免费
维修或更换服务。

可回收纸

www. wrenchina. com